LONG SEAMS

COURSE	ORIENTATION	ORIENTATION
1(TOP)	120°	300°
2	125°	305°
3	120°	300°
4	125°	305°

*VERT – TOP TO BOTTOM

*NOTE: ALL ELEVATIONS ARE PULLED FROM WELD SEAM FOR EASE OF FABRICATION

NOTE 8: SPOT RADIOGRAPHY AS PER CODE.

Ship loose items:
NONE

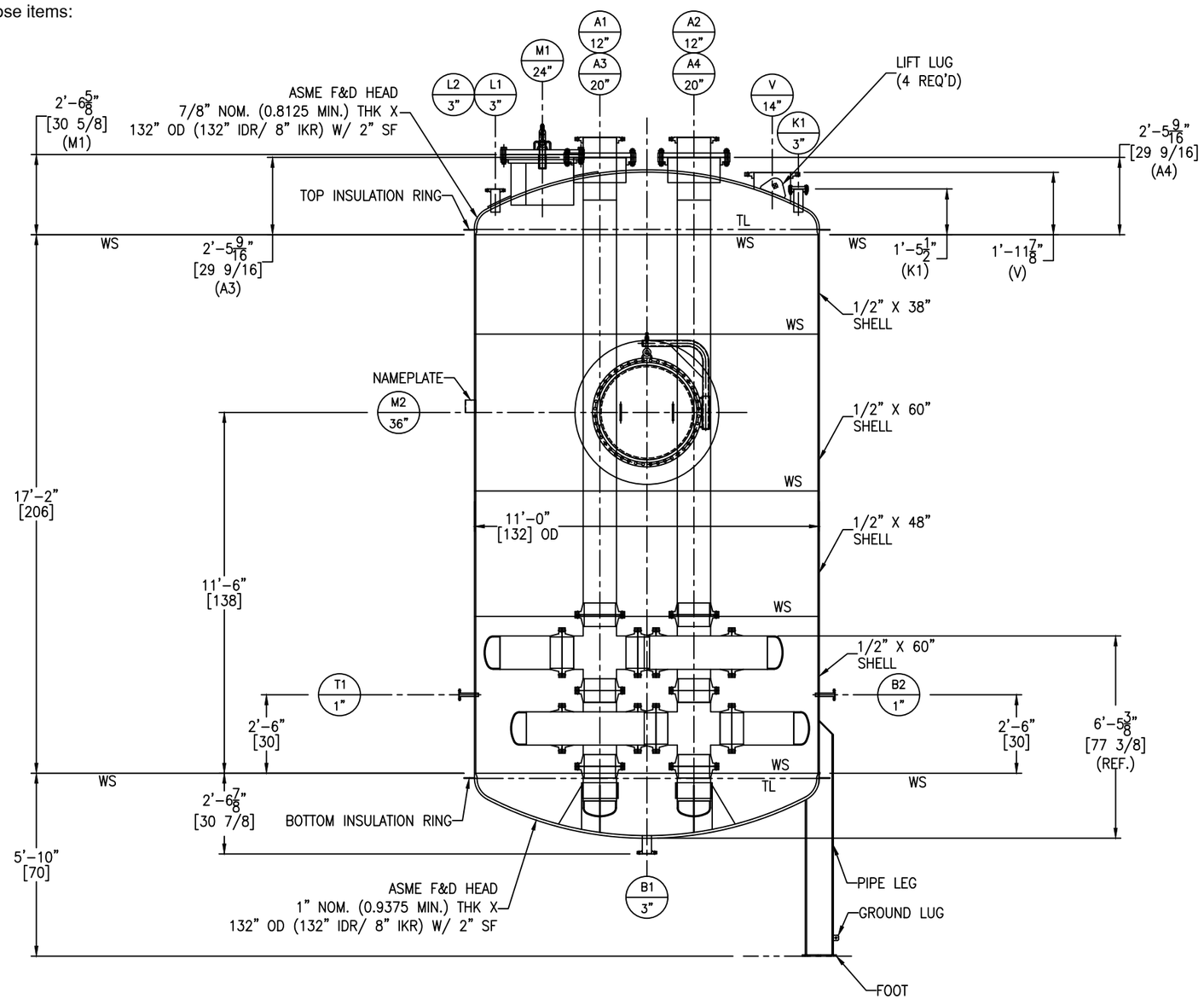

NOZZLE SCHEDULE

MARK	SERVICE	SIZE	RATING	TYPE / STYLE	NECK SCHED.	PROJECTION EXT. (℄)	PROJECTION INT. (MIN.)	WELD FIGURE	REPAD SIZE (WIDTH X THK.)	WELD SIZE "A1"	"A2"	"B1"	"B2"	"C1"	"C2"
A1	INLET-SPARGER	12"	150#	RFSO	40/40S	SEE DWG	SEE DWG	1,7	–	1/4	9/16	3/8	1/4	–	–
A2	INLET-SPARGER	12"	150#	RFSO	40/40S	SEE DWG	SEE DWG	1,7	–	1/4	9/16	3/8	1/4	–	–
A3	INLET	20"	150#	RFSO W/ BLIND	3/8"	SEE DWG	1"	1,7	–	1/4	9/16	3/8	1/8	–	–
A4	INLET	20"	150#	RFSO W/ BLIND	3/8"	SEE DWG	1"	1,7	–	1/4	9/16	3/8	1/8	–	–
V	VENT	14"	150#	RFSO	40S	SEE DWG	–	1,4	–	1/4	9/16	3/8	1/8	–	–
B1	DRAIN	3"	150#	RFSO	40S	SEE DWG	–	1,4	–	1/4	5/16	1/4	1/8	–	–
L1	LEVEL INDICATOR	3"	150#	RFSO	40S	SEE DWG	1"	1,7	–	1/4	5/16	1/4	1/8	–	–
M1	MANWAY	24"	150#	RFSO	1/2"	SEE DWG	1"	1,8	9 1/2" X 5/8"	1/4	11/16	3/8	1/8	5/8	1/2
M2	MANWAY	36"	150#	RFSO SERIES B	1/2"	8"	1"	1,8	9 1/2" X 1/2"	1/4	1/2	3/8	1/4	1/2	3/8
K1	SPARE	3"	150#	RFSO W/ BLIND	40S	SEE DWG	1"	1,7	–	1/4	5/16	1/4	1/8	–	–
L2	LEVEL SWITCH	3"	150#	RFSO	40S	SEE DWG	1"	1,7	–	1/4	5/16	1/4	1/8	–	–
B2	SAMPLE PORT	1"	150#	RFSO	40S	6"	1"	1,7	–	1/8	3/16	3/16	1/8	–	–
T1	TEMP. INDICATOR	1"	150#	RFSO	40S	6"	1"	1,7	–	1/8	3/16	3/16	1/8	–	–

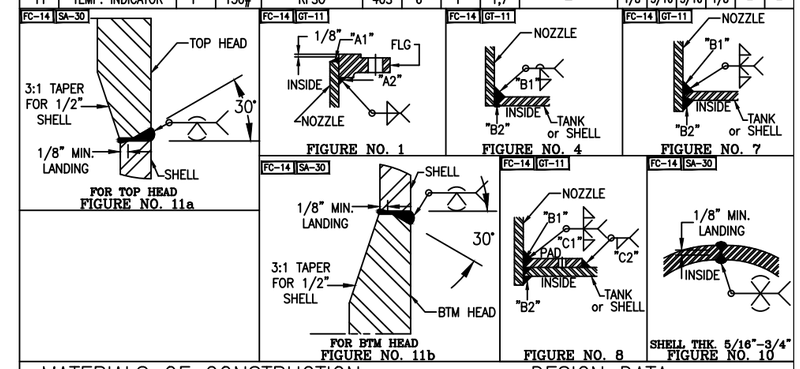

MATERIALS OF CONSTRUCTION

	VESSEL
SHELL	SA240-304/304L
HEADS	SA240-304/304L
RIM ANGLE	–
NOZZLE NECKS	SA312-304/304L WLD & SA403-304/304L WPB
NOZZLE FLANGES	SA182F-304/304L
MANWAY NECKS	SA240-304/304L
MANWAY FLANGES	SA182F-304/304L
GASKETS	GARLOCK 3000
BOLTS/STUDS	SA193-B7 (ZINC PLATED)
NUTS	SA194-2H (ZINC PLATED)
INTERNAL BOLTS/STUDS	SA193-B8
INTERNAL NUTS	SA194-8
REPADS	SA240-304/304L
SUPPORTS/HOLD DOWNS	SA312-304/304L WLD & SA240-304/304L
LIFTING LUGS	SA240-304/304L
INSULATION RINGS	SA240-304/304L
GROUND LUG	SA240-304/304L
BAFFLE	–
VACUUM RING	–
HANDRAIL	–
HANDRAIL CLIPS	–
PLATFORM	–
PLATFORM CLIPS	–
DIPTUBE SUPPORT	–
JACKET SHELL	–
JACKET HEADS	–
JACKET NOZZLE NECKS	–
JACKET NOZZLE FLANGES	–

DESIGN DATA

	VESSEL
DESIGN AND FAB. CODE	ASME
CERT. STAMP REQ'D.	YES
DESIGN PRESSURE	100 PSIG
DESIGN TEMPERATURE	450° F
MIN. DESIGN METAL TEMP.	-20° F @ 100 PSIG
OPERATING PRESSURE	ATM
OPERATING TEMPERATURE	100° F
JOINT EFFICIENCY HEADS	0.85
JOINT EFFICIENCY SHELL	0.85
CORROSION ALLOWANCE	0"
SPECIFIC GRAVITY	1.0
EARTHQUAKE ZONE	Ss = (0.248) S1 = (0.105)
WIND LOAD	120 MPH
STRESS RELIEF	NOT REQ'D
RADIOGRAPHIC EXAM	SPOT (SEE NOTE 8)
DYE PENETRANT EXAM	NOT REQ'D
MAGNETIC PARTICLE EXAM	NOT REQ'D
PNEUMATIC TEST	123 PSIG / GAUGE #9
SPARGER DESIGN AND FAB. CODE	ASME
SPARGER CERT. STAMP REQ'D.	YES
SPARGER DESIGN PRESSURE	100 PSIG
SPARGER DESIGN TEMPERATURE	450° F
SPARGER MIN. DESIGN METAL TEMP.	-20° F @ 100 PSIG
SPARGER OPERATING PRESSURE	ATM
SPARGER OPERATING TEMPERATURE	100° F
SPARGER JOINT EFFICIENCY HEADS	0.7
SPARGER JOINT EFFICIENCY SHELL	0.7
SPARGER HYDRO TEST	–

VESSEL FINISH

INTERIOR WELD TREATMENT:	SAV TANK STANDARD
EXTERIOR WELD TREATMENT:	SAV TANK STANDARD
SAV TANK FINISHING STANDARD:	SEE NOTE 6
INSULATION:	4" BY OTHERS
SANDBLASTING:	SEE NOTE 7

VESSEL CAPACITY AND WEIGHTS

OPERATING CAPACITY	–
FULL CAPACITY	13,750 GAL.
EMPTY SHIPPING WEIGHT	35,900 LBS.
WEIGHT FULL OF WATER	150,900 LBS.
WEIGHT FULL OF PRODUCT	150,900 LBS.

ASME SECT. VIII, DIV. 1
2023 EDITION

ENG. _____ DATE: _____
Q.C. _____ DATE: _____
A.I. _____ DATE: _____

This drawing is issued for customer approval. please review, make approval changes (if any) in red. check the appropriate box, sign & date.

- ☐ Approval – no changes. Please proceed with fabrication.
- ☐ Approved as noted. Please proceed with fabrication
- ☐ Not approved. Please make changes and resubmit.

Customer signature _____ Date _____

GENERAL NOTES

1.) COVER ALL FLANGES, OPENINGS & MACHINED SURFACES PRIOR TO SHIPMENT UNLESS OTHERWISE NOTED.
2.) BOLT HOLES TO STRADDLE 0° & 180° UNLESS OTHERWISE NOTED.
3.) REPADS TO HAVE (1) ø1/4" NPT TELL-TALE HOLES FOR PNEUMATIC TESTING AT 2 PSIG FOR PRESSURE RETAINING PARTS. ALL OTHER REPADS TO HAVE (1) ø1/4" WEEP HOLE AT LOWEST POINT ON PAD.
4.) ASME CODE VESSELS TO BE IN ACCORDANCE WITH UG-80 & UG-81. TOLERANCES: +/- 1/8" FOR DIMENSIONS AND +/- 2 DEGREES FOR ORIENTATIONS.
5.) ASME MATERIALS TO CONFORM TO THE FOLLOWING: FLANGES – B16.5, FITTINGS – B16.9 & COUPLINGS – B16.11.
6.) PICKLE ALL EXTERIOR WELDS. PASSIVATE INTERIOR & EXTERIOR OF VESSEL.
7.) SANDBLAST EXTERIOR OF THE TANK SP6.
8.) X-RAY: SPOT RADIOGRAPHY AS PER CODE.

REVISIONS

REV	D.BY	C.BY	DATE	DESCRIPTION
2				AS BUILT
1	RS	NP	12/8/25	CERTIFIED
0	RS	AD	11/11/25	APPROVAL

Savannah Tank & Equipment Corp.
1517 Telfair Road, Savannah, GA 31415
(912) 233-8902

DRAWN BY: RS
CHK'D BY: AD
APPROVED BY: NP
SCALE: 3/8" = 1'-0"

HARPER LOVE
RUPTURE DISC CATCH TANK
EQUIP. # T-1615
CUST. PO # 56173

DRAWING NO.: 101-25-1 SHT 1 OF 6 REV. SET 1

LONG SEAMS

COURSE	ORIENTATION	ORIENTATION
1(TOP)	120°	300°
2	125°	305°
3	120°	300°
4	125°	305°

*VERT – TOP TO BOTTOM

Ship loose items:
NONE

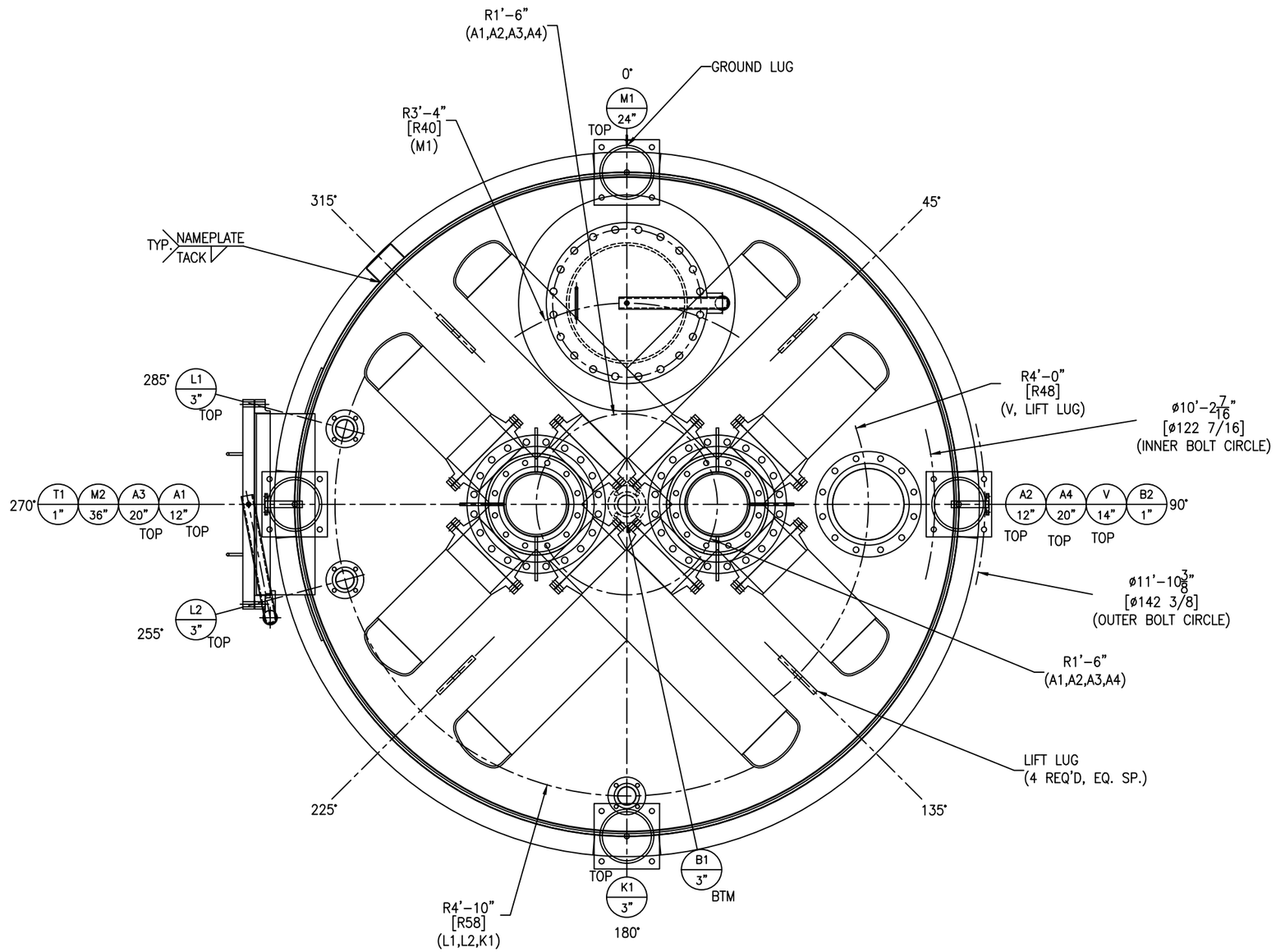

REV	D.BY	C.BY	DATE	DESCRIPTION
2				AS BUILT
1	RS	NP	12/8/25	CERTIFIED
0	RS	AD	11/11/25	APPROVAL

⚠1 REVISIONS

Savannah Tank & Equipment Corp.
1517 Telfair Road, Savannah, GA 31415
(912) 233–8902

DRAWN BY: RS
CHK'D BY: AD
APPROVED BY: NP
SCALE: 3/4" = 1'–0"

HARPER LOVE
RUPTURE DISC CATCH TANK
EQUIP. # T–1615
CUST. PO # 56173

DRAWING NO.: 101–25–2 SHT 2 OF 6 REV. SET 1

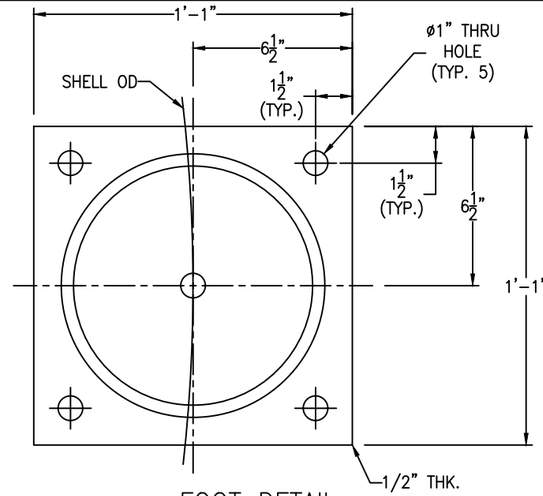

FOOT DETAIL

(4 REQ'D) SCALE: 3" = 1'-0"

FC-14

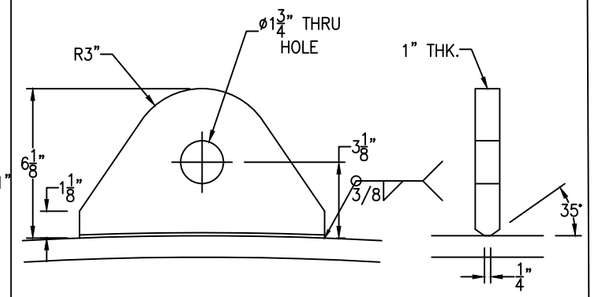

SHACKLE PIN DIA. = 1 1/2"

LIFT LUG DETAIL

(4 REQ'D) SCALE: 3" = 1'-0"

FC-14

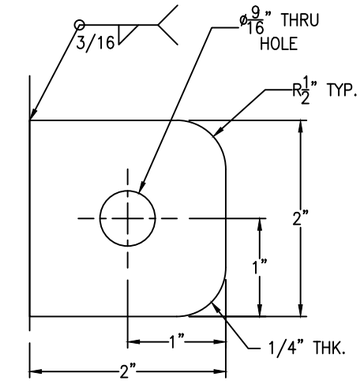

GROUND LUG IS LOCATED @ 0°

GROUND LUG DETAIL

(1 REQ'D) SCALE: 1'-0" = 1'-0"

FC-14

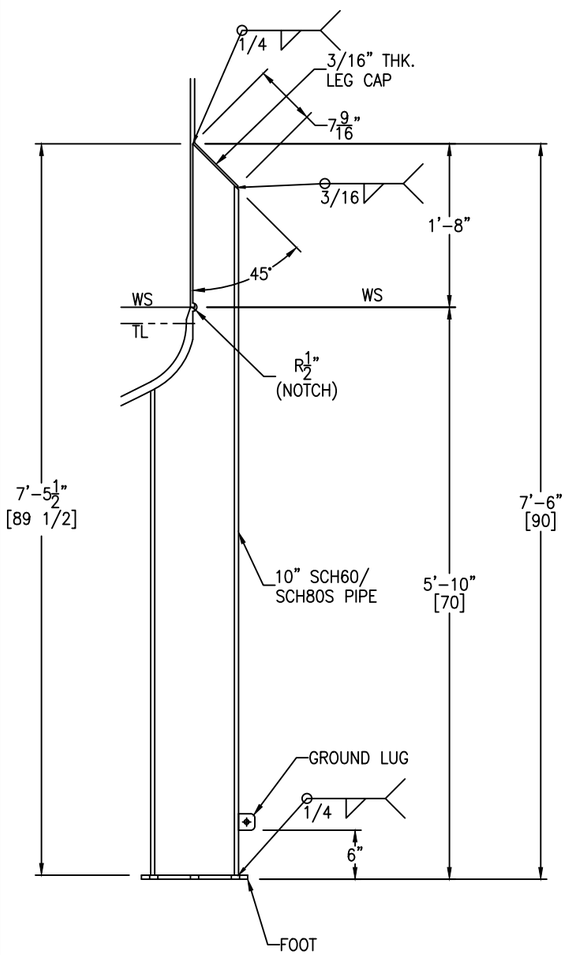

LEG DETAIL

(4 REQ'D) SCALE: 1" = 1'-0"

FC-14

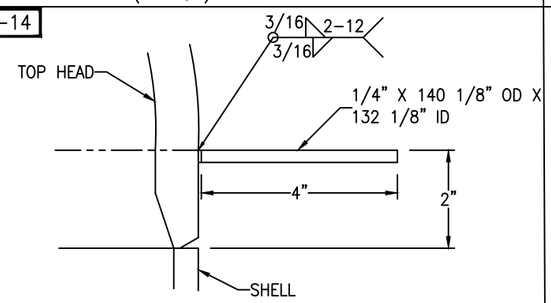

TOP INSULATION RING DETAIL

SCALE: 6" = 1'-0"

FC-14

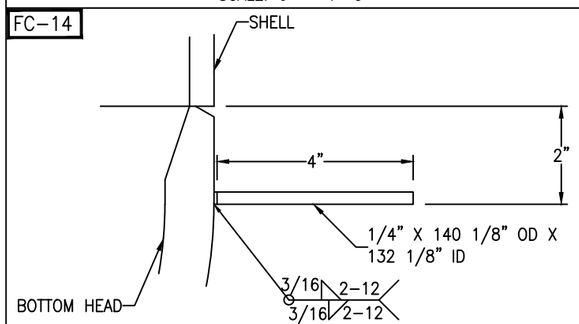

BOTTOM INSULATION RING DETAIL

SCALE: 6" = 1'-0"

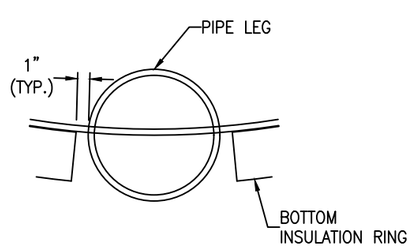

BOTTOM INSULATION CUTOUT DETAIL

(4 REQ'D) SCALE: 1 1/2" = 1'-0"

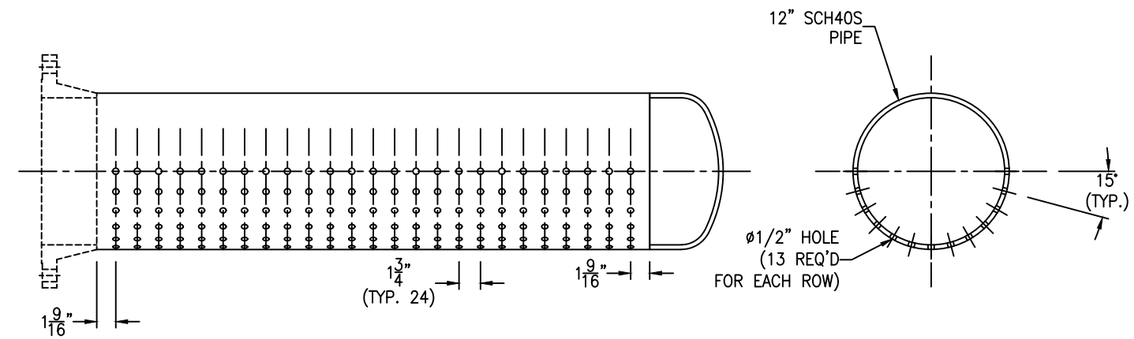

LONG BRANCHES HOLE PATTERN DETAIL

(4 REQ'D) SCALE: 1 1/2" = 1'-0"

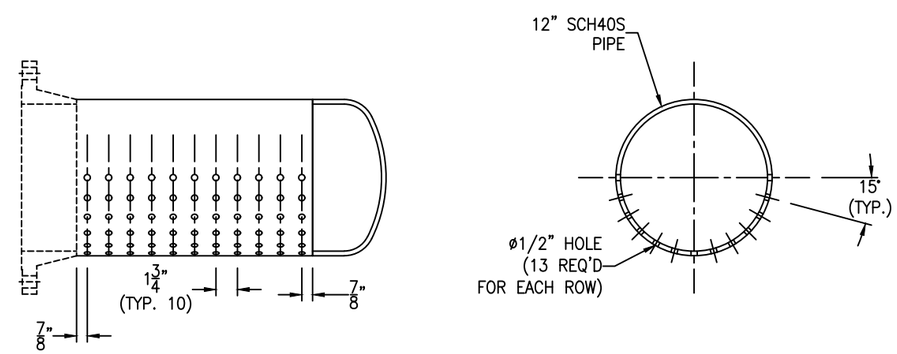

SHORT BRANCHES HOLE PATTERN DETAIL

(4 REQ'D) SCALE: 1 1/2" = 1'-0"

REV	D.BY	C.BY	DATE	DESCRIPTION
2				AS BUILT
1	RS	NP	12/8/25	CERTIFIED
0	RS	AD	11/11/25	APPROVAL

REVISIONS

Savannah Tank & Equipment Corp.
1517 Telfair Road, Savannah, GA 31415
(912) 233-8902

DRAWN BY: RS
CHK'D BY: AD
APPROVED BY: NP
SCALE: 3/8" = 1'-0"

HARPER LOVE
RUPTURE DISC CATCH TANK
EQUIP. # T-1615
CUST. PO # 56173

DRAWING NO.: 101-25-3 | SHT 3 OF 6 | REV. SET 1

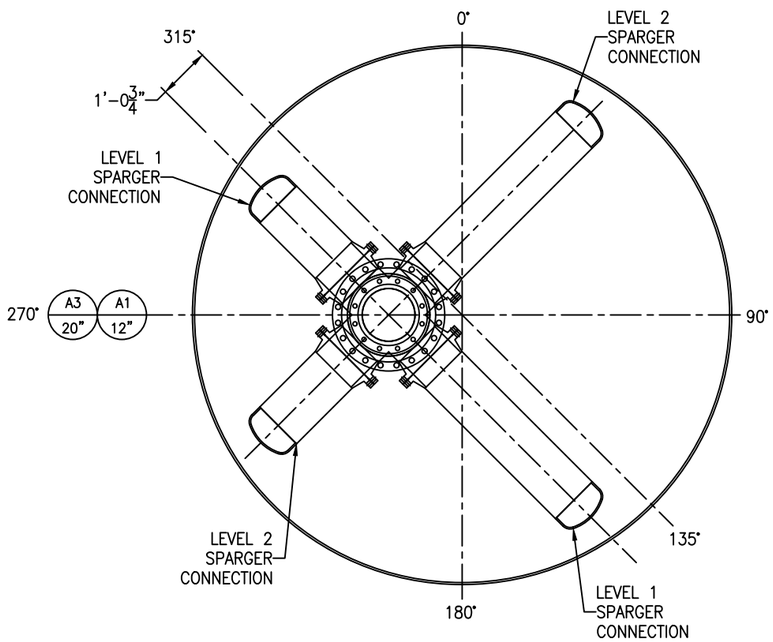

NOZ. A1,A3 DETAIL

SCALE: 1/2" = 1'-0"

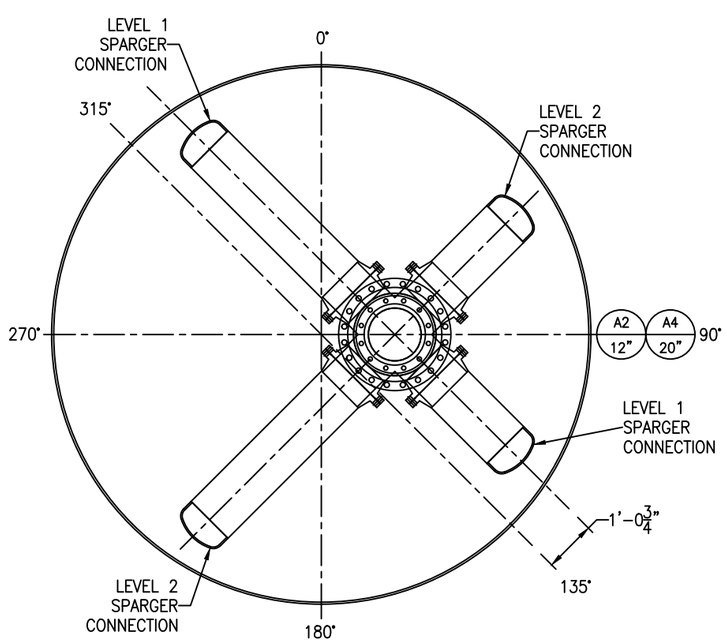

NOZ. A2,A4 DETAIL

SCALE: 1/2" = 1'-0"

FC-14 GT-11

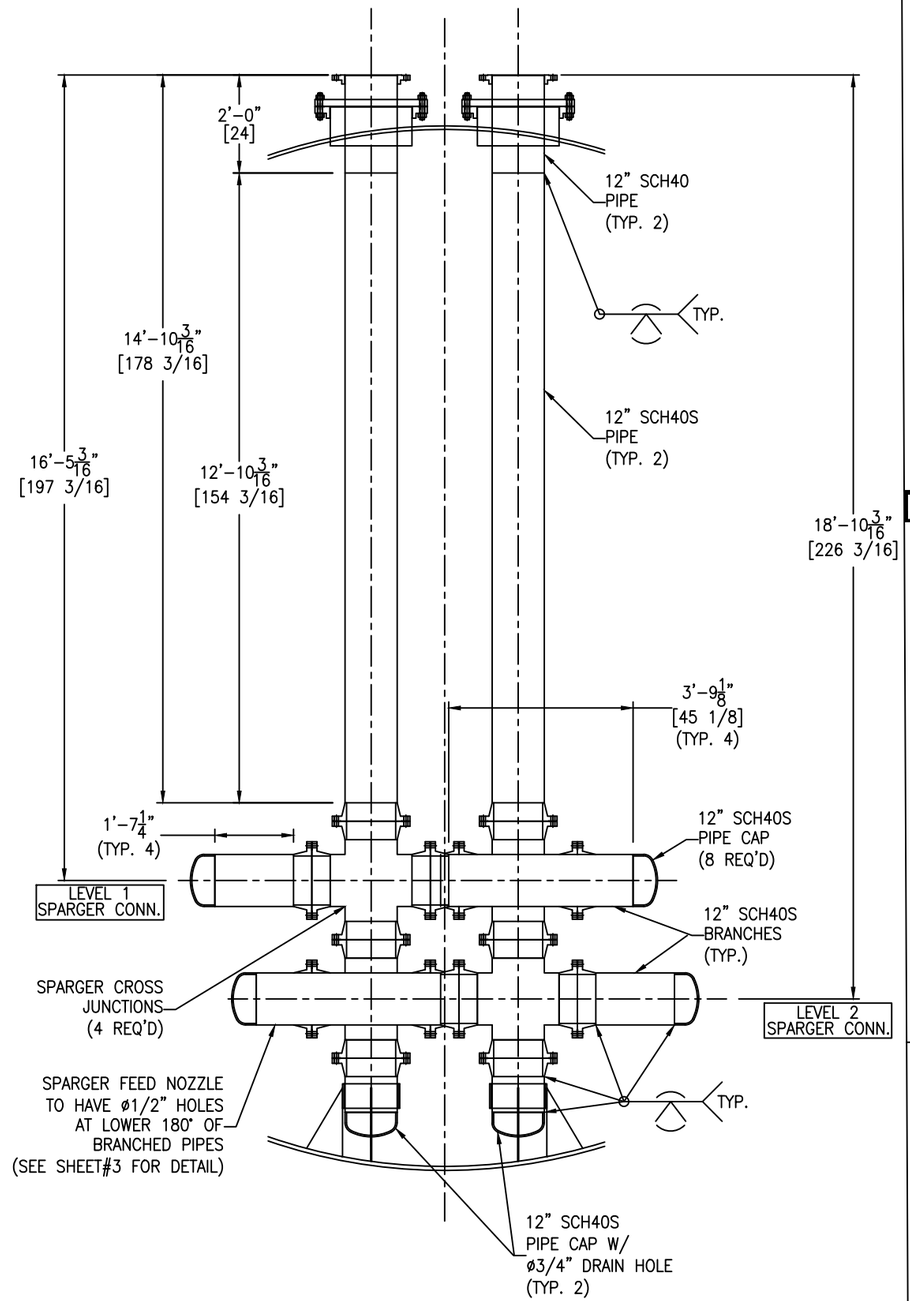

SPARGER PIPE DETAIL

SCALE: 1/2" = 1'-0"

FC-14

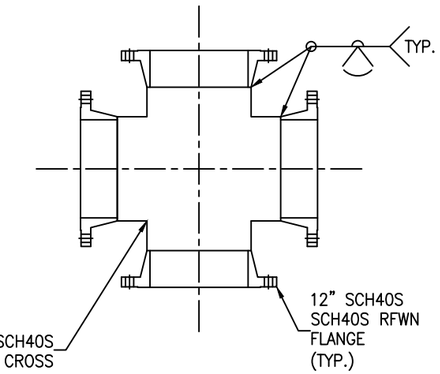

SPARGER CROSS DETAIL

(2+2 REQ'D) SCALE: 1" = 1'-0"

FC-14

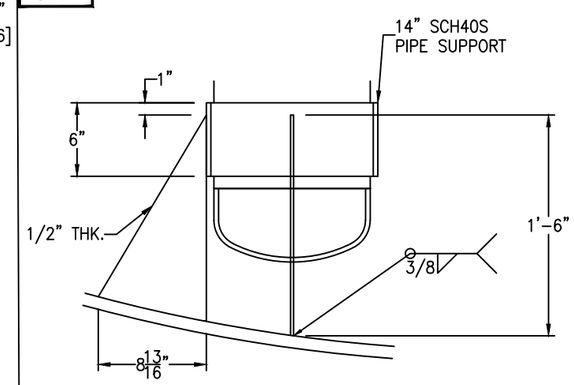

NOTE:
FOR A1 & A3 SUPPORTS ARE LOCATED AT 0°, 180° & 270°.
FOR A2 & A4 SUPPORTS ARE LOCATED AT 0°, 90° & 180°.

BOTTOM SUPPORT DETAIL

(1+1 REQ'D) SCALE: 1 1/2" = 1'-0"

Bolting for blinds
A3, A4: (20+20) 1 1/8" - 7 NC x 6 1/2" FULL THREADED STUD (SA193-B7 ZINC)
(40+40) 1 1/8" - 7 NC NC HH NUT (SA194-2H ZINC)
(1+1) 20" 150# RING GASKET X 1/8" THK. (GARLOCK 3000)
K1: (4) 5/8" - 11 NC x 3" HH BOLT (SA193-B7 ZINC)
(4) 5/8" - 11 NC NC HH NUT (SA194-2H ZINC)
(1) 3" 150# RING GASKET X 1/8" THK. (GARLOCK 3000)
Internal Bolting
Cross Noz: (12*14) 7/8" - 9 NC x 5" FULL THREADED STUD (SA193-B8)
(24*14) 7/8" - 9 NC NC HH NUT (SA194-8)
(14) 12" 150# RING GASKET X 1/8" THK. (GARLOCK 3000)

REV	D.BY	C.BY	DATE	DESCRIPTION
2				AS BUILT
1	RS	NP	12/8/25	CERTIFIED
0	RS	AD	11/11/25	APPROVAL

⚠ REVISIONS

Savannah Tank & Equipment Corp.
1517 Telfair Road, Savannah, GA 31415
(912) 233-8902

DRAWN BY: RS
CHK'D BY: AD
APPROVED BY: NP
SCALE: 3/8" = 1'-0"

HARPER LOVE
RUPTURE DISC CATCH TANK
EQUIP. # T-1615
CUST. PO # 56173

DRAWING NO.: 101-25-4 SHT 4 OF 6 REV. SET 1

FC-14

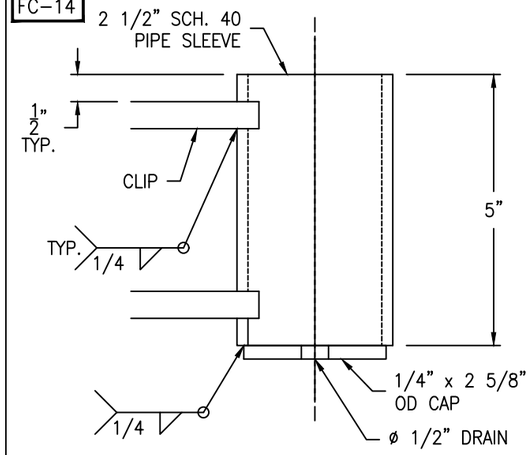

SLEEVE DETAIL

(1 REQ'D) SCALE: 6" = 1'-0"

FC-14

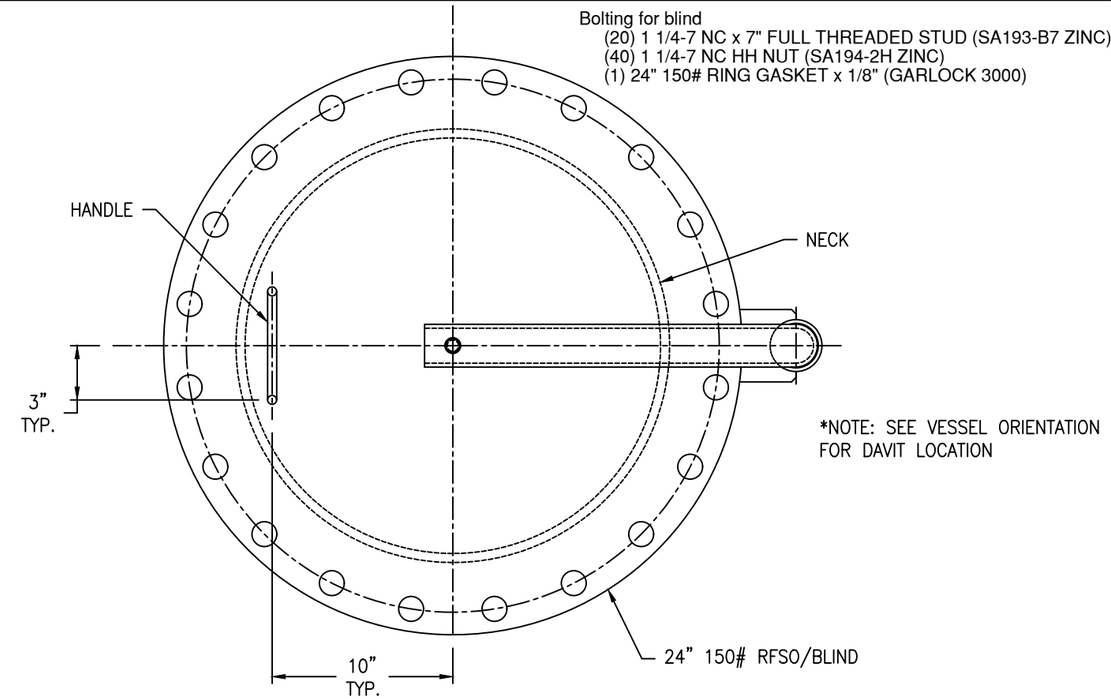

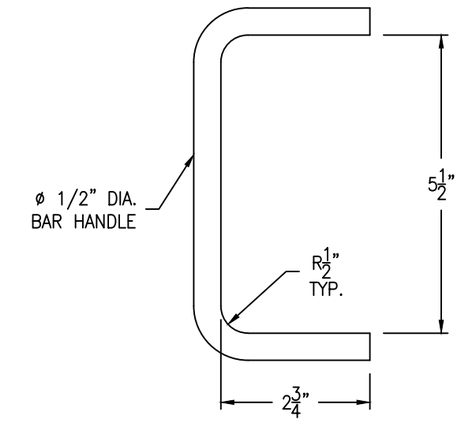

HANDLE DETAIL

(1 REQ'D) SCALE: 6" = 1'-0"

FC-14

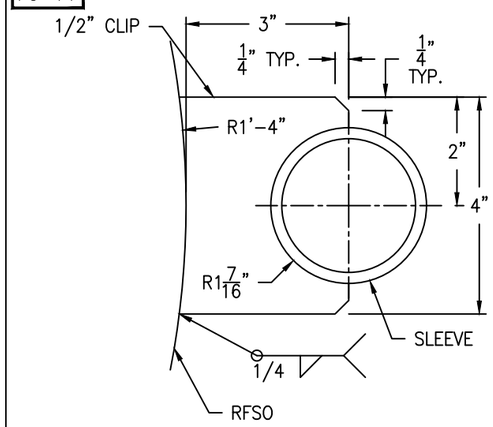

UPPER CLIP DETAIL

(1 REQ'D) SCALE: 6" = 1'-0"

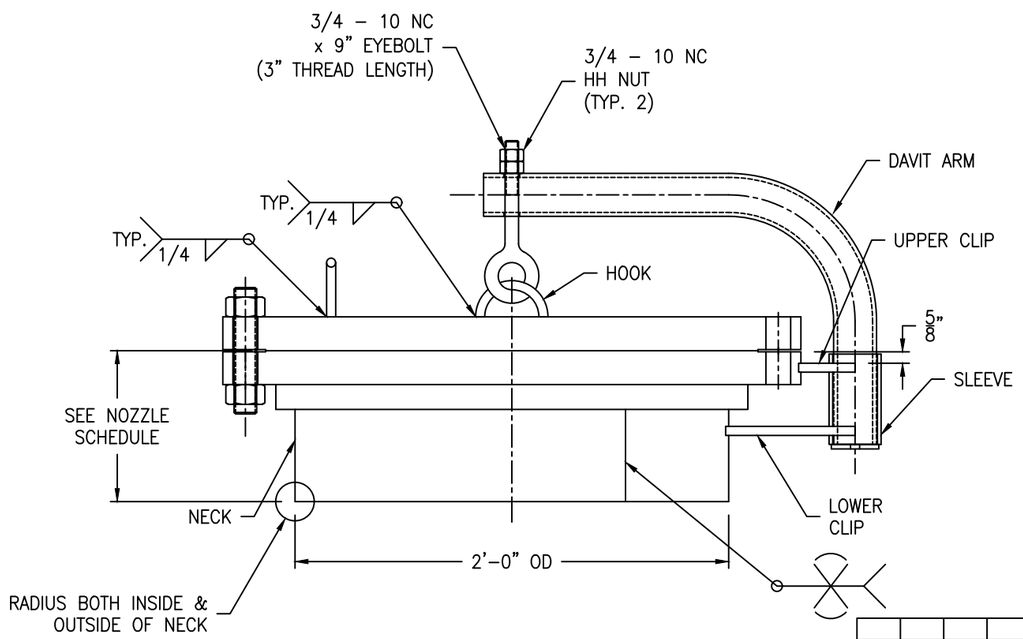

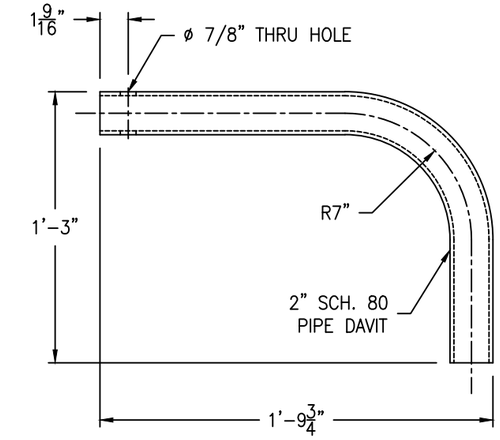

DAVIT ARM DETAIL

(1 REQ'D) SCALE: 2" = 1'-0"

FC-14

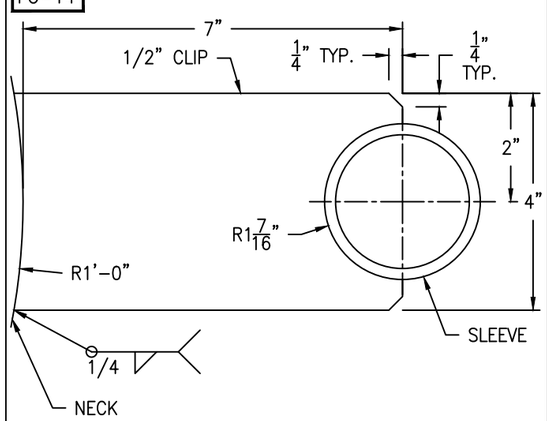

LOWER CLIP DETAIL

(1 REQ'D) SCALE: 6" = 1'-0"

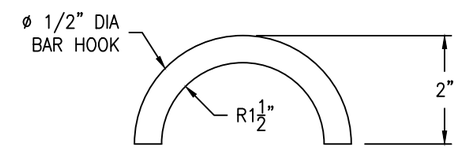

HOOK DETAIL

(1 REQ'D) SCALE: 6" = 1'-0"

REV	D.BY	C.BY	DATE	DESCRIPTION
2				AS BUILT
1	RS	NP	12/8/25	CERTIFIED
0	RS	AD	11/11/25	APPROVAL

1 REVISIONS

Savannah Tank & Equipment Corp.
1517 Telfair Road, Savannah, GA 31415
(912) 233-8902

DRAWN BY: RS
CHK'D BY: AD
APPROVED BY: NP
SCALE: 2" = 1'-0"

HARPER LOVE
RUPTURE DISC CATCH TANK
EQUIP. # T-1615
CUST. PO # 56173

DRAWING NO.: 101-25-5 SHT 5 OF 6 REV. SET 1

SHOP RELEASE DATE: 12/5/25 SET # .

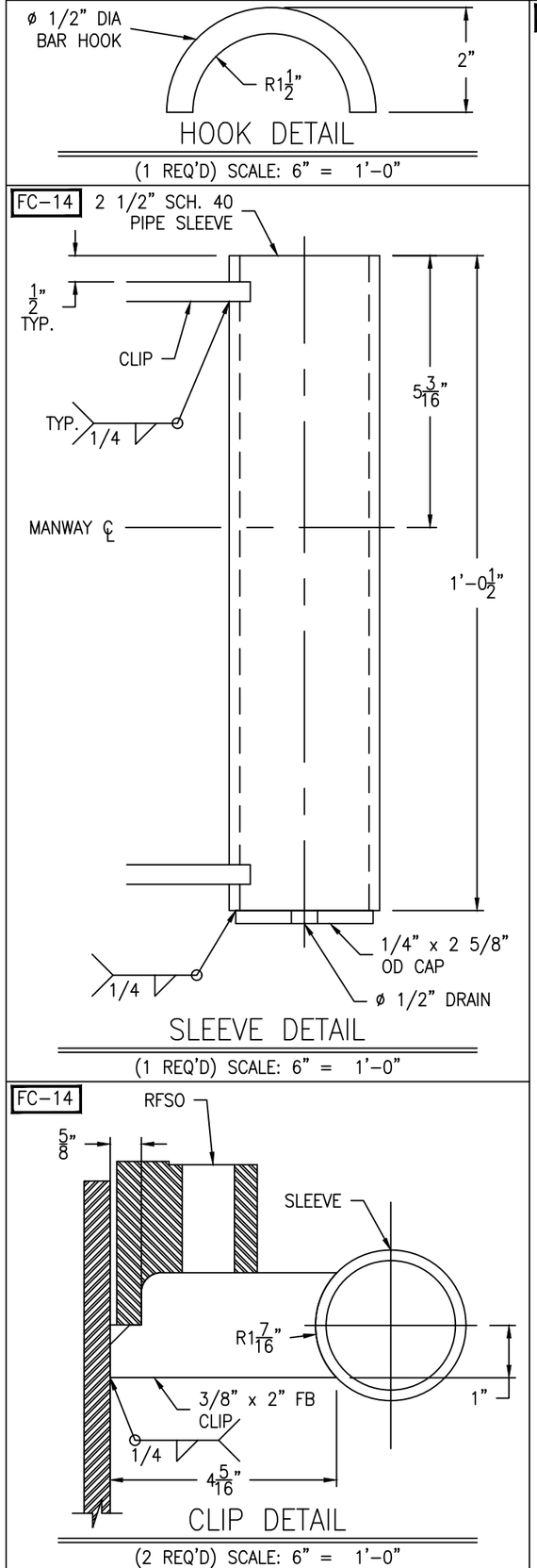

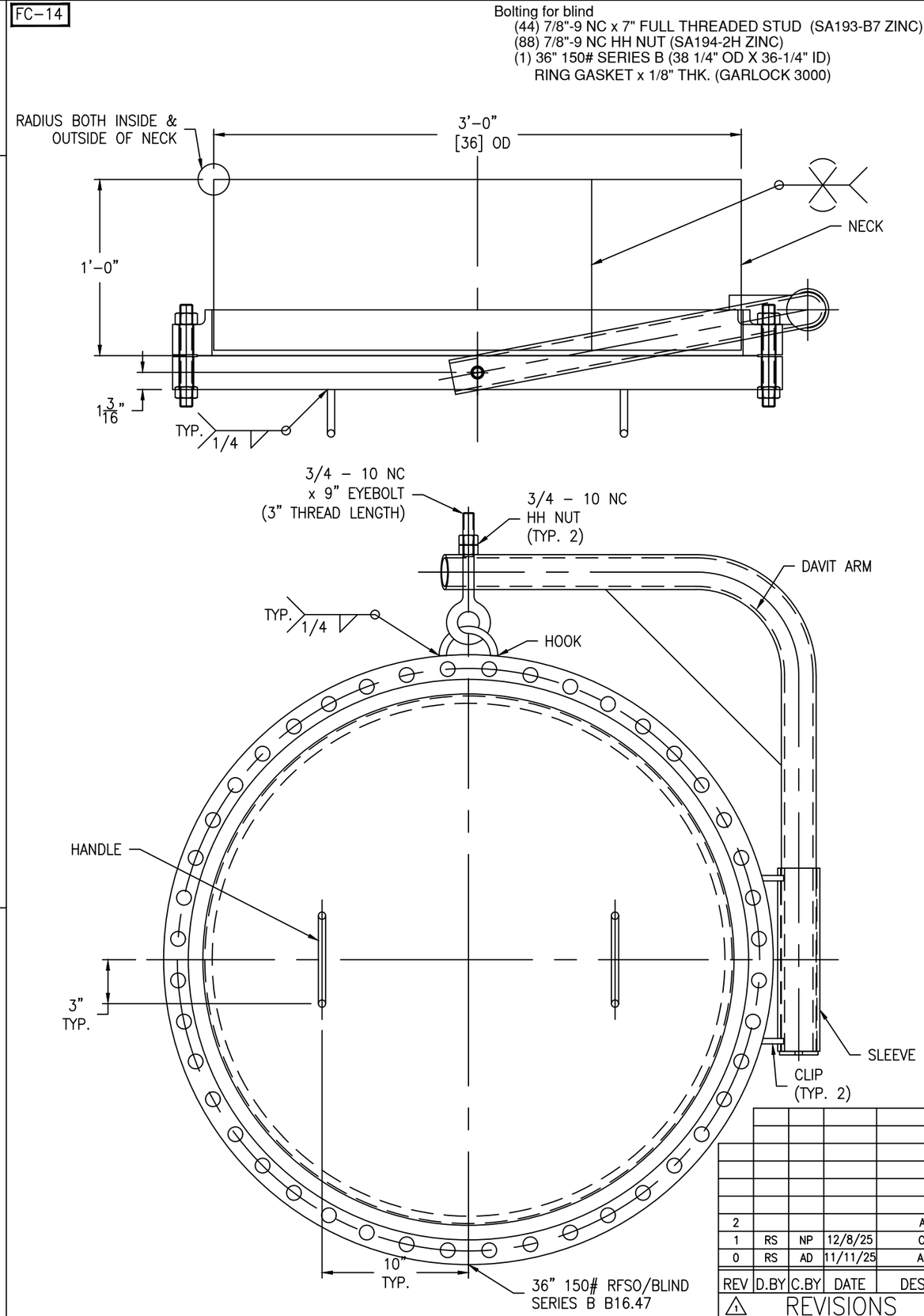

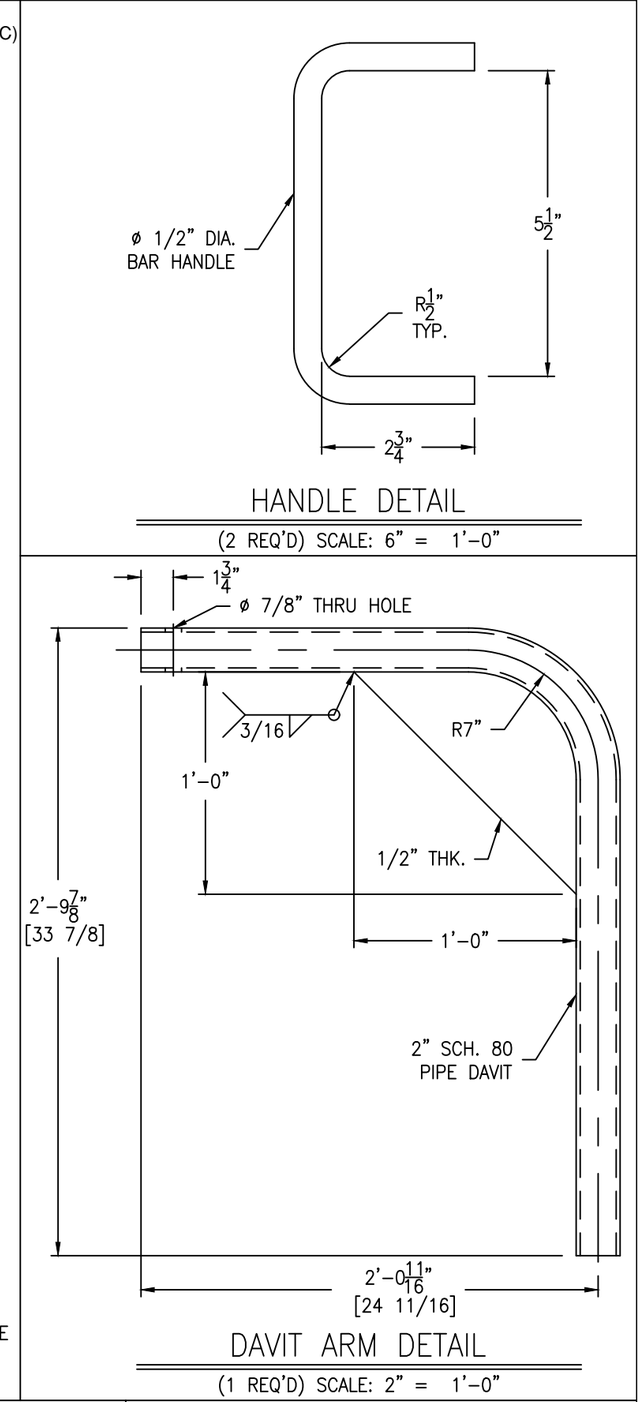

REV	D.BY	C.BY	DATE	DESCRIPTION
2				AS BUILT
1	RS	NP	12/8/25	CERTIFIED
0	RS	AD	11/11/25	APPROVAL

REVISIONS

Savannah Tank & Equipment Corp.
1517 Telfair Road, Savannah, GA 31415
(912) 233-8902

DRAWN BY: RS
CHK'D BY: AD
APPROVED BY: NP
SCALE: 2" = 1'-0"

HARPER LOVE
RUPTURE DISC CATCH TANK
EQUIP. # T-1615
CUST. PO # 56173

DRAWING NO.: 101-25-6 SHT 6 OF 6 REV. SET 1